Pakistan Journal of Commerce and Social Sciences
2022, Vol. 16 (2), 279-298
Pak J Commer Soc Sci

Impact of Green Transformational Leadership on Job Performance: The Mediating Role of Psychological Contract Fulfillment

Razia Bano
Department of Management Science, Karakoram International University, Gilgit, Pakistan
Email: razia.arif@kiu.edu.pk

Ifzal Ahmad (Corresponding author)
Department of Management Science, Karakoram International University, Gilgit, Pakistan
Email: ifzal.ahmad@kiu.edu.pk

Mehfooz Ullah
Department of Management Science, Karakoram International University, Gilgit, Pakistan
Email: mehfoozullah@kiu.edu.pk

Article History

Received: 05 Apr 2022 Revised: 23 June 2022 Accepted: 26 June 2022 Published: 30 June 2022

Abstract

Green transformational leadership is a style that has the potential to not only shape individual behaviors towards more environmentally friendly behaviors, but it has also the potential to impact the employees' other non-green behaviors. This paper aims to investigate the impact of green transformational leadership style on employees' non-green behavior i.e. job performance. The study further explored the mediating role of psychological contract fulfillment between the green transformational leadership and job performance. Data were collected from various private sector organizations in Islamabad and Gilgit regions of Pakistan. A total sample size of 319 was recorded. Structural equation modeling via SmartPLS software was used to test the hypotheses. Results supported our proposed hypotheses. Several theoretical and practical implications are discussed.

Keywords: green transformational leadership, psychological contract fulfillment, job performance, social identity theory, social exchange theory, non-green behaviors, Pakistan.

1. Introduction & Literature Review

Global warming and environmental issues are buzzwords that no one can ignore and eliminate from their work environment these days (Guzel & Okumus 2020). This globally changing environmental scenario has necessitated for the organizations to align their strategies with environmentally sensitized practices. To do so, all the stakeholders including organizations and leadership have their due role to adopt more responsible business practices and they are under increased pressure (Ahmad et al., 2021). Particularly,

the behaviors of leaders evolving into green transformational leadership have emanated from this broader concept of climate change and its adverse effects surfaced during the past couple of decades. These leaders have the responsibility to envision greener practices, formulate such strategies and implement the same (Du & Yan, 2022). It is argued that the success of a true leader lies when his/her leadership style is based on the needs of followers and all shareholders with whom the leader interacts (Agarwal & Bhal, 2020).

To this end, green transformational leadership (GTL) is an emerging concept in organizations that seeks to highlight its importance in fostering and practicing green initiatives (Chen & Chang, 2013; Du & Yan, 2022). GTL refers to the behavior and understanding of leaders about the importance of actions to protect the environment and also influence the employees towards a greener cause (Begum et al., 2022). The exact meaning of GTL is defined as the "behavior of leaders who motivate followers to achieve environmental goals and inspire followers to perform beyond expected levels of environmental performance" (Chen & Chang, 2013). Green transformational leadership inspires the employees to serve a sublime cause creating in them belongingness for pro-environmental behaviors beyond what is beneficial for themselves (Robertson, 2018).

Although limited, but prior literature mostly explored the impact of GTL on green outcomes. Even more limited are the studies exploring the non-green outcomes of GTL. Exploring the non-green outcomes is important because, scholarship on leadership have emphasized to explore new leadership skills and competencies that can promote sustainable business practices as well as carry forward the organizational interests of profit maximization at the same time (Farrukh et al., 2022). To address such voids, this study aims to explore the impact of GTL on employees' job performance. In so doing, this study develops a novel research framework through which GTL leads to enhanced job performance. To the best of the author's knowledge, limited or no study has thus far explored the impact of GTL on non-green outcomes such as job performance.

Furthermore, our proposed framework also addresses another research gap i.e., the underlying mechanism through which GTL leads to non-green outcomes (Iqbal et al., 2020). Responding to this call, our study proposed the mediating role of psychological contract fulfillment (PCF) between GTL and job performance. Past studies on PCF were mainly focused on its breach side, whereas the fulfillment side i.e. PCF has attracted limited attention in the extant literature despite its widespread implications and being an important predictor of employees' attitudes and behaviors (Ahmad & Zafar, 2018). PCF are those unwritten promises, commitments, and pledges made by an organization/manager with an employee that have the chances of fulfillment in the employee's perception (Rousseau, 1995). Rooted in social exchange theory, PCF comprised of the unwritten expectations such as fair treatment, fair compensation, opportunities for growth, safe working conditions, responsible business practices, etc. in return of a good performance (Ahmad & Zafar, 2018; Ahmad et al., 2018). Past studies found that PCF has a significant positive role in improving employees' commitment (Fontinha et al., 2013), attitude to promote innovation at work (Chang et al., 2003), extra-role behaviors (Ahmad et al., 2018; Mo & Shi, 2015), work engagement and turnover (Sharma, Sharma, & Agarwal, 2021), job satisfaction and organization commitment (Mazumdar et al., 2022), and reduce employees turnover (Collins, 2010), etc.

HRM literature generally suggests that HR practices may not have a direct impact on an employee's workplace performance. Rather, its effects occur through specific social and psychological processes (Kehoe & Wright, 2013). Borrowing from the social exchange theory (Blau, 1964) and social identity theory (Tajfal & Turner, 1979; 1985), we propose that GTL will trigger employees' enhanced feeling of PCF which will ultimately lead to enhanced job performance. The rest of the paper is organized as follows:

In the next section, discussion on the conceptual framework and hypotheses development is given. This section will be followed by detailed elaboration of the methodology adopted, followed by results of the data collected. Discussion, implications, and future research area will be given in the concluding part of the paper.

2. Conceptual Framework and Hypotheses Development

2.1 GTL, Social Exchange Theory, and Job Performance

As documented in the previous literature, green transformation leadership (GTL) is seen as a key component of green performance for developing organizations (Koohang et al., 2017). It empowers workers to be productive considering the effectiveness of green itself. In particular, supervisory support and encouragement from senior management encourage employees' environmental actions to produce eco-friendly products with fewer resources and contribute to pollution reduction. Previous studies have also associated the ethical dimension with the transformational leadership (e.g. Vlachos et al., 2013). We believe that such traits are also associated with the GTL which reflects a good image of leaders and inspire and offer a clear direction for the employees to follow suit. Past studies have also argued that leaders are the reflections of an organization whereby "in the working relationship between leaders and followers, leaders represent the personal actualization of otherwise abstract, impersonal existence of the organization" (Wieseke et al., 2009)." Therefore, the leaders' vision, thoughts, and behaviors are believed to be strong influencers of the followers' beliefs and understandings of the organizations (Vlachos et al., 2013). GTL is therefore argued to be a leadership style that inspires, encourages, and transforms followers' behaviors to achieve green goals, objectives, and promote sustainability in the organization (Du & Yan, 2022). Past studies on GTL found its positive impacts on OCB (Srour, Kheir-El-Din, & Samir, 2020), sustainable organizational development (Chen & Change, 2013), and employees' taking charge behavior (Du & Yan, 2022), etc. However, studies on exploring the impact of GTL on non-green outcomes is still a grey area in the extant literature despite its potential implications.

To provide theoretical underpinning to the above discussion, social exchange theory (Blau, 1964) is best suited for this purpose. This theory argues that interaction between the two parties is symbiotic and reciprocal (Cropanzano & Mitchel, 2005). It means that every action of an individual directed towards another will have a similar reaction. It means that a positive action will trigger a positive reaction and vice versa. This interdependence upon each other's actions is reciprocal, therefore, an environment of trust, cooperation and mutual respect is developed (Cropanzano & Mitchel, 2005). Furthermore, the concept of reciprocity associated with social exchange theory also becomes a norm in the

organizations and those who break these norms are punished (Ahmad et al., 2018). Therefore, such norms also become an obligation for the followers to adopt and adhere to.

Applying this theorization to the GTL in relation to job performance, it is argued that GTL through their charisma, ethical conduct, and visionary approach will inspire employees to follow his/her directions. Since the focus of GTL is on promoting pro-environmental and sustainable business practices along with the usual business priorities (Tosun et al., 2022), therefore, employees would be inspired and obligated to adopt and follow their leader's footsteps for not only performing pro-environmental behaviors as well as perform well on their usual job descriptions. Employees would also be inspired to be part of such an organization or work under such leadership that are aware of their responsibilities towards the triple-bottom-line. It will create an environment of trust in the organization which will compel the employees to reciprocate their part in the form of good performance.

Past studies found that organizational sustainability performance can be directly linked to leaders and their role in enhancing innovation for environmental performance (Zhao et al., 2021). In addition, the GTL fully embodies the beliefs, attitudes, values , and behaviors of upper management which directly affects the relationship with organization's performance (Koohang et al., 2017). This study considers transformational leadership because it has an idealizing influence (Zhang et al., 2011) and provides an enormous source of motivation, and uses intellectual stimulation (Khan & Khan, 2022). Our argument can be further strengthened with the help of social identity theory (Tajfel & Turner, 1985) which suggests that people prefer to be identified with such organizations/leaders that are responsible, ethical, and moral. Such association will enhance their image in the society and community. Therefore, working under the leadership of GTL, employees would feel proud to be associated with responsible leaders and hence feel obligated to contribute their part positively in the form of enhanced performance. Although this obligation is not binding on the employees, however, the notion of reciprocity will compel them in so doing. Past studies have also found positive impact of GTL on green performance (Liu & Jie, 2020). Therefore, it is proposed that:

- **H_1:** There is a positive influence of GTL on job performance.

2.2 GTL and PCF

Past studies on the concept of psychological contract argue that written contracts explain few expectations in an employee-employer relationship whereas, there are many unwritten expectations but due to its complexities, all these expectations are not covered in the written agreement (Rousseau, 1995). Under such circumstances, employees and employer extend their trust – a key element of a contract (Blau, 1964), and develop psychological relationships with their employers. Psychological contracts are "individual beliefs, shaped by the organization, regarding terms of exchange agreement between individuals and their organization" (Rousseau, 1995)." This definition suggests that these psychological understandings have some sort of shared expectations from each other (Ahmad et al., 2018). For example, both parties would expect that a safe working environment, fair treatment, and career advancement opportunities will be provided to employees in return of employees' good performance and commitment to the organization (Conway & Briner, 2005).

The mutuality of these expectations underlines the importance of social exchange theory where one party's actions and behaviors will be reciprocated by the other party in the form of various job behaviors. Past studies have differentiated two types of psychological contracts i.e., transactional, and relational. Transactional contracts are more short term in nature and focused on more monitory rewards/expectations, whereas relational contracts are more focused on the long-term and non-monetary expectations e.g., fair treatment, respect, and safe working conditions etc. (Raja et al., 2004). Studies suggest that PCF covers both transactional and relational contracts and is an overall evaluation of the fulfillment of all such expectations (Colquitt et al., 2014).

GTL leadership are those ethical and moral leadership behaviors that reshape and transform existing business practices and create value for various stakeholders including the triple-bottom-line i.e. people, planet and profit (Iqbal et al., 2020). Therefore, while perceiving the behaviors of such leaders, it is argued that when employees' values related to environmental protection and pro-environmental behaviors become commensurate with GTL, they would develop a feeling of PCF. This will happen because when employees' expectations from their organizations to be responsible toward environment and other stakeholders are part of their psychological contracts. Therefore, green transformational leaders through their actions of encouraging new innovative ideas for environmental protection, clarifying green goals and standards for the subordinates, and provide them feedback would certainly increase the feeling of improved PCF. Such leaders will be considered as ethical and responsible and hence unlikely to break their promises made to the employees (Ahmad et al., 2018). Therefore, it is proposed that:

- **H_2:** Green transformational leadership will have a positive relationship with psychological contract fulfillment.

2.3 PCF and Job Performance

As discussed earlier, the fulfilment side of psychological contract has been largely an ignored area and hence its outcomes are also not exhaustively explored (Conway & Coyle-Shapiro, 2012). Most of the studies on the psychological contract have focused on its breach side. Where the fulfilment side seems relatively unexplored. Among the limited studies available, researchers found a positive relationship between PCF and OCB (Ahmad & Zafar, 2018). In line with the arguments of Ahmad and Zafar (2018), we also believe that when employees feel that their psychological contract is fulfilled (such as, they have received a safe working environment or they are treated fairly in the organization, etc.), their feeling of PCF will be enhanced. At this moment, the role of social exchange theory comes into surface. Employees would feel that since organization has fulfilled their promises with them, therefore, this will create an imbalance in the employee-employer relationship. Both cognitive and transactional expectations of employee will be fulfilled (Ahmad & Zafar, 2018). This imbalance will compel employee to reciprocate the favor by improving his/her performance. They will feel obliged for so doing. A recent study has also found a positive impact of PCF on task performance of Gig workers (Liu & Jie, 2020); therefore, we also propose that:

- **H_3:** PCF will have a positive impact on the job performance of employees.

2.4 Mediating Role of PCF

One of the major components of transformational leadership is its ethical dimension (Vlachos et al., 2013). Employees while perceiving various green policies and practices which emanate from green transformational leaders will be perceived as fulfilling of its obligations. As discussed earlier, employees expect that their organizations would not only provide them safe working conditions, but they also expect that these organizations would fulfill their social responsibilities. While carrying forward the organizational agenda and providing an overall strategic direction, green transformational leaders will be perceived as ethical and responsible. Employees would think that since they are fulfilling their obligations towards the triple-bottom-line, therefore, they would also fulfill the expectations of employees also. This will also happen because green transformational leaders would also clarify expectations, set realistic targets, inspire followers through his own actions, develop a collaborative culture, and provide positive feedback (Khan & Khan 2022). This will lead to a trusting relationship and consequently, to the enhanced feeling of PCF.

This fulfilled feeling of PCF working under GTL is expected to compel employees to engage in improved job performance and other positive behaviors (Casser et al., 2017). Therefore, in line with the social exchange theory and social identity theory, employees would not only feel obliged to reciprocate with positive behaviors, but they would also happily identify themselves with such responsible leaders. Their emotional attachment will also be enhanced with such a responsible organization (Kickul & Lester, 2001). Past studies also found that PCF a key mediating role in triggering positive employees' outcomes. For example, Ahmad et al., (2018) found confirmed the mediating role of PCF between ethical leadership style and OCBs. Similarly, Ahmad and Zafar (2018) found the positive impact of PCF on OCBs. Similar other studies support this argument that PCF is important predictor of various other key behaviors of employees such as commitment (Fontinha et al., 2013), turnover intentions (Collins, 2010), and job performance (Rodwell et al., 2015). Therefore, we are proposing that:

- **H_4:** PCF mediates the relationship between GTL and job performance.

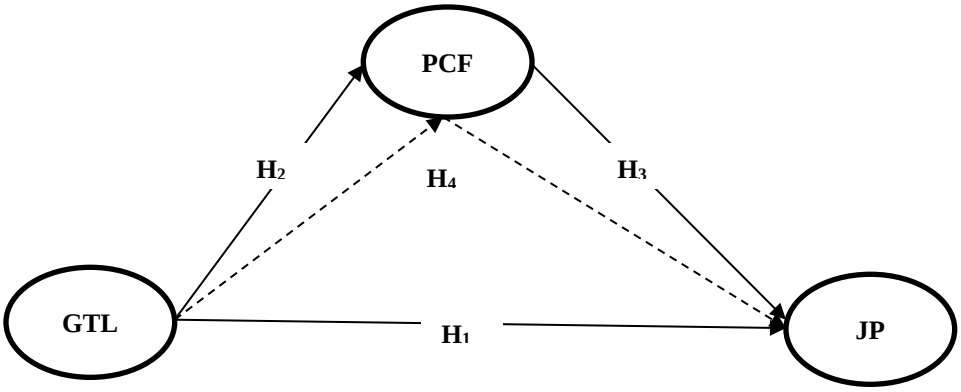

Figure 1: Conceptual Framework

Notes: GTL = Green Transformational Leadership, JP = Job Performance, PCF = Psychological Contract Fulfillment

3. Methodology

To investigate the given hypothesis, a deductive strategy was adopted. A survey strategy was adopted to acquire quantitative data from a diverse group of respondents in a cross-sectional way. Our research gained considerable support from the company's senior management, who had been actively adopting rules and procedures and interacting with subordinates both directly and indirectly. Prior to their voluntary involvement, respondents were guaranteed total anonymity and secrecy.

Employees from a variety of governmental and commercial service and product providers in Pakistan were surveyed. A total of 550 surveys were sent out through email and hard copies. A total of 319 questionnaires of them being viable and chosen for further study. As a result, a response rate of about 58% was observed, which is deemed reasonable in social science research (Groves & Peytcheva, 2008; Smith, 2009).

3.1 Measures

Apart from demographic features, all items were evaluated on a 5-point Likert ranging from 5 (strongly agree) to 1(strongly disagree).

3.2 Green Transformative Leadership

Green transformative leadership was measured using a six-item scale created by Podsakoff et al. (1996). "The leadership of our organization provides a clear environmental vision for the employees to follow;" for example, is an example of a scale item.

3.3 Psychological Contract Fulfillment

The three-items scale developed by Rousseau (1995) was used to measure this variable. a sample item of this variable is "In general, this organization has lived up to its promise to me".

3.4 Job Performance

The scale from (Vittal, 2007; Gold et al., 2001) was used to assess job performance, which was divided into three categories: job efficiency, job effectiveness, and job quality. "The quantity of work I complete surpasses my boss's expectations," for example, is an example of a question.

4. Results

4.1 Model Estimation with PLS-SEM

PLS-SEM was used to analyze the collected data and to test the study's hypotheses. The PLS method was followed owing to the exploratory nature of the study. Besides, PLS-SEM is most suitable for dealing with small sample sizes, for handling complex models above all there is no compulsion for the data sets to follow the normality criteria (Hair et al., 2017). The model of the study includes three first order reflective constructs. The study used the approaches recommended by Hair et al. (2017) to evaluate measurement models and structural model in SmartPLS3.

4.2 Measurement Model

The measurement model was evaluated using four types of tests that include indicator reliability, the internal consistency reliability, the convergent validity and discriminant validity (Hair Jr et al., 2020). Before that, inner VIF (variance inflation factor) values were to examine to identify the potential the multi-collinearity issues in the model. All the values were found to be below 3 and 5 (i.e. JP=1.84 and PCF=1.63) which indicates that the study model is free of multi-collinearity issues.

Table 1 shows the factor loadings, composite reliabilities, Cronbach alpha, and average variance extracted (AVE) which were found to be above the threshold of 0.50. This confirms the indicator reliability. The values documented for the composite reliability and Cronbach's alpha were also meeting the minimum criteria of above 0.70, signifying the achievement of internal consistency for all the latent variables in our study.

Table 1: Factor loadings, CR, Cronbach Alpha, and AVE

Construct	Items	Loadings	CR	Cronbach Alpha	AVE
Green Transformational Leadership	GTL1 GTL2 GTL3 GTL4 GTL5 GTL6	0.826 0.835 0.851 0.830 0.856 0.786	0.930	0.910	0.690
Job Performance	JPE1 JPE2 JPE3 JPEF1 JPEF2 JPEF3 JPQ1 JPQ2 JPQ3 JPQ4 JPQ5	0.673 0.756 0.695 0.784 0.772 0.787 0.785 0.797 0.835 0.839 0.807	0.943	0.935	0.604
Psychological Contract Fulfilment	PCF1 PCF2 PCF3	0.889 0.858 0.886	0.912	0.851	0.771

Table 2: Inner VIF Values

	GTL	JP	PCF
GTL		1.854	1.000
JP			
PCF		1.631	

Notes: GTL = Green Transformational Leadership, JPE = Job Performance Efficiency, JPEF = Job Performance Effectiveness, JPQ = Job Performance Quality, PCF = Psychological Contract Fulfillment

The convergent validity is established using AVE test, for which the minimum cutoff value is 0.50. Our data's AVE values for all the constructs spans 0.604 to 0.771, proposing that convergent validity falls within acceptable range.

Table 3: Item Cross Loadings

	GTL	JP	PCF
GTL1	**0.826**	0.380	0.591
GTL2	**0.835**	0.288	0.559
GTL3	**0.851**	0.354	0.581
GTL4	**0.830**	0.285	0.535
GTL5	**0.856**	0.361	0.585
GTL6	**0.786**	0.237	0.526
JPE1	0.204	**0.673**	0.204
JPE2	0.296	**0.756**	0.240
JPE3	0.159	**0.695**	0.220
JPEF1	0.246	**0.784**	0.237
JPEF2	0.220	**0.772**	0.227
JPEF3	0.281	**0.787**	0.287
JPQ1	0.342	**0.785**	0.375
JPQ2	0.326	**0.797**	0.298
JPQ3	0.384	**0.835**	0.394
JPQ4	0.373	**0.839**	0.368
JPQ5	0.333	**0.807**	0.351
PCF1	0.601	0.367	**0.889**
PCF2	0.632	0.316	**0.858**
PCF3	0.551	0.344	**0.886**

This is followed by ascertaining the discriminant validity which could be confirmed by examining items' cross-loadings of an individual construct – whose loadings should be considerably lower on other constructs than on its own, as shown in Table 3. However, the HTMT criterion and Fornel & Larker method are considered to be most efficient for evaluating the discriminant validity (Hair et al., 2017). As shown in Table 4 (for Fornell-Larcker Criterion), highlighted values depict the square root of AVE, which is higher as compared to the off-diagonal correlations. Henseler, Ringle, & Sarstedt (2015) highly recommends HTMT ratios for evaluating the discriminant validity of constructs contained in measurement models. The HTMT values should be lower than 0.85 or 0.90 in order to avoid the problem of discriminant validity. Table 5 depicts that the HTMT values for the model under study are below the 0.85, which indicates that there are no issues of discriminant validity.

Table 4: Fornell & Larcker Criterion

	GTL	JP	PCF
GTL	**0.831**		
JP	0.386	**0.777**	
PCF	0.679	0.390	**0.878**

Table 5: HTMT Ratios

	GTL	JP	PCF
GTL			
JP	0.396		
PCF	0.767	0.419	

4.3 Structural Model

The next step after evaluating measurement model is examining the structural which basically corresponds to measuring the model's predictive relevancy and testing the significance of relationships among the constructs. Table 6 shows the results of the structural model and Figure 1 shows the structural model along with t-vales and path coefficients whereas Figure 2 shows the histograms. Path coefficients and corresponding t-values were employed to ascertain hypothesized relationships of the model. The path between GTL and JP turn outs to be significant ($\beta = 0.225$, $t = 2.784$, $p < 0.01$) which provides support to confirm H_1. The effect of GTL on PCF is positive and statistically significant ($\beta = 0.679$, $t = 19.788$, $p < 0.01$) which confirms H_2. Therefore, it can be interpreted GTL has a strong positive impact on PCF and increase in the perception of GTL will enhance the feeling of PCF. Likewise, the influence of PCF on JP was statistically significant ($\beta = 0.237$, $t = 2.927$, $p < 0.01$) supporting H_3.

Table 6: Results of structural Model- Hypothesis Testing

Hypothesis		Beta	Std.Dev	t-value	P Values
H_1	GTL -> JP	0.225	0.081	2.784	**0.005**
H_2	GTL -> PCF	0.679	0.034	19.788	**0.000**
H_3	PCF -> JP	0.237	0.081	2.927	**0.003**

Notes: Q square: GTL->PCF= 0.335, PCF=>JP 0.094

4.4 Mediating Analysis

In order to ascertain the presence of mediating role of PCF, the "value of variance accounted for (VAF)" was calculated using the standard formula which basically calculates the ratio of indirect to total effect (Ramayah et al., 2018). Therefore, to appreciate the role of any construct as a mediator, the value of VAF > 80% would indicate full mediation whereas VAF < 20 % connotes no mediation at all; and a VAF >20% but less than 80% indicates the presence of partial mediation. The VAF value calculated for this study model is 41.55 per cent which hints at the presence of partial mediation as the VAF value stays between 20 and 80 per cent (Hair. Hence the presence of mediating effect confirms H_4.

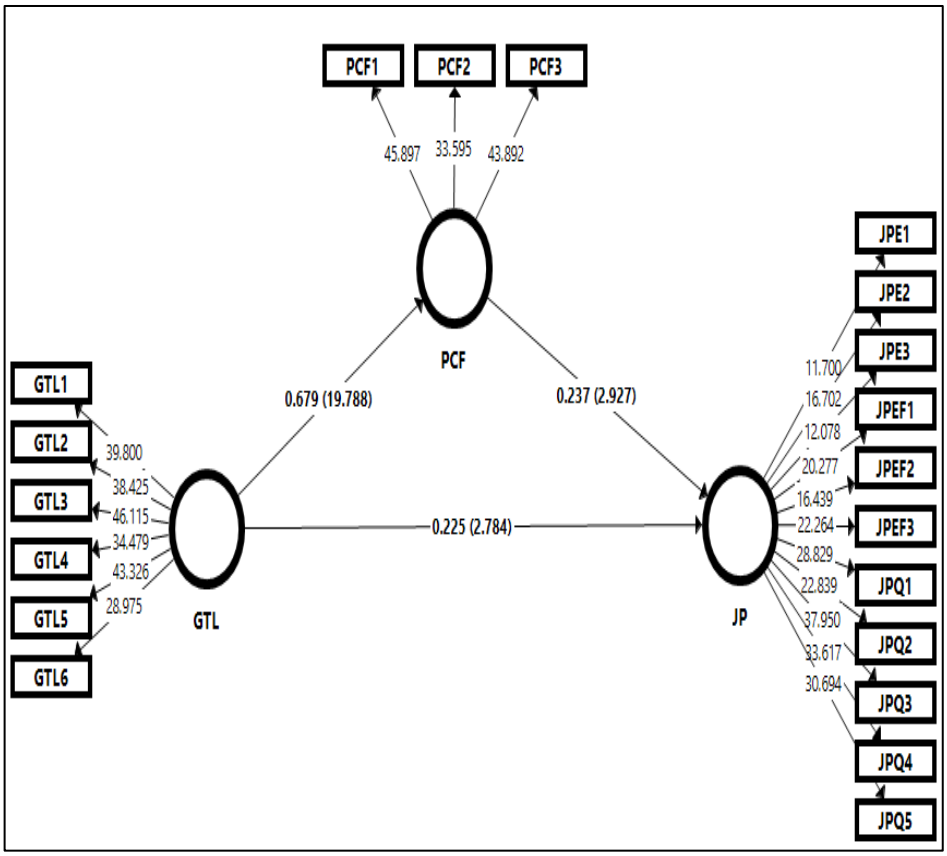

Figure 2: Hypotheses Results (Smart PLS 3)

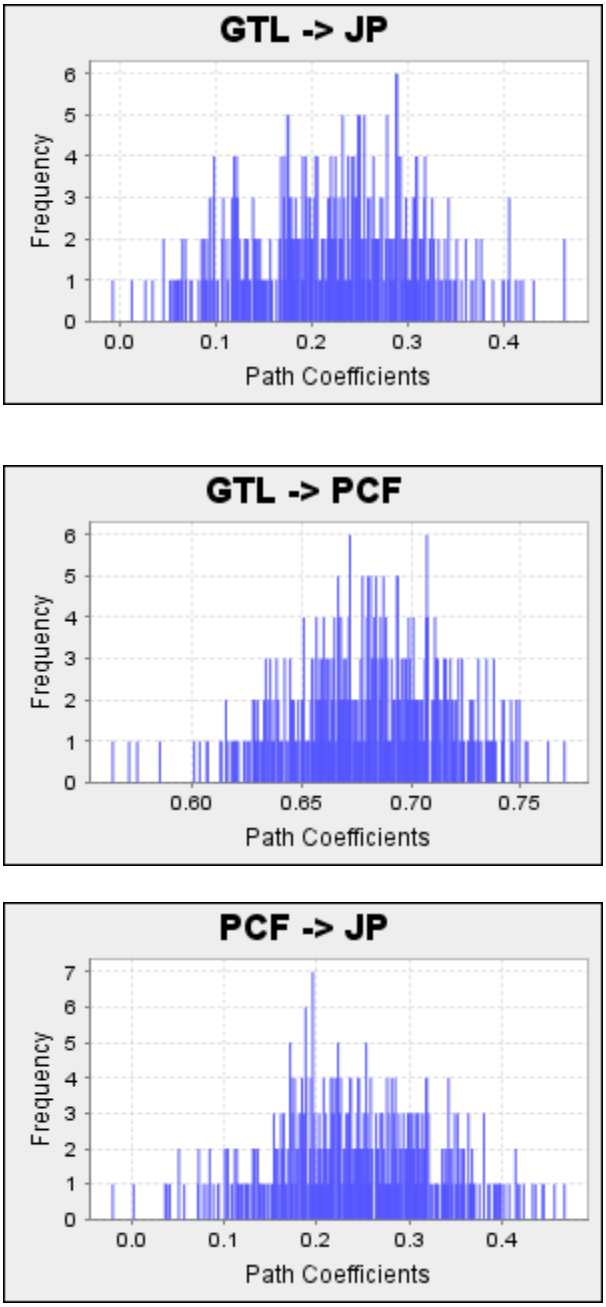

Figure 3: Path Coefficients Histograms

4.5 Predictive Relevance & Effect Sizes

The variance explained (R^2) and predictive relevance (Stone-Geisser's Q^2) of the endogenous latent constructs are reported (Geisser, 1974; Stone, 1974) using the standard criteria. Q^2 can be figured out employing the blindfolding procedure embedded in SmartPLS. For $Q^2>0$ that the model under study is having adequate predictive relevance. The Q^2 values of PCF and JP which are endogenous constructs, were found to be 0.355 and 0.094. respectively. Which implies that this research model has acceptable predictive power to explain the effect of green transformational leadership on job performance. Moreover, the effect size, which reflects the statistical power of the research model, was evaluated using the values of f^2. This is basically a measure to assess the R^2 variation in the absence of a particular exogenous construct from the model under study and hence examines the effect of the omitted variable on endogenous construct. The f^2 values for this are reported in Table 7 which indicate the presence of a small and large effect respectively. As suggested by Cohen (1988), f^2 values of 0.02, 0.15, or 0.35 corresponds to the presence of small, medium and large effect sizes respectively.

Table 7: Effect Sizes and Predictive Relevance

	f^2	Q^2	R^2
PCF	0.854	0.335	0.461
JP	0.037	0.094	0.179

5. Discussion

This study seeks to validate the impact of Green Transformational Leadership on Job Performance through the mediating role of Psychological Contract Fulfillment with the help of Social Identity Theory. The GTL significantly impacts the Job Performance whereas PCF as a mediator also partially affects the job performance. First of all, the study found empirical support for the positive impact of GTL on job performance. This finding is in line with the previous study of Du and Yan (2022) who also found support for the impact of GTL on non-green outcome i.e. employees' taking charge behavior.

Secondly, the study also explored the impact of GTL on PCF which is a novel addition in the existent literature on GTL. However, this finding is also in line with the previous study conducted by Ahmad et al., (2018) exploring the impact of ethical leadership style on psychological contract fulfilment. We believe that there are several common characteristics between the two leadership styles such as both styles give importance to ethical and responsible business practices (Vlachos et al., 2013), therefore, our findings extend the extant literature in this dimension also.

Thirdly, the impact of PCF on job performance was also found in this study which adds to the existent literature on PCF. The previous findings on PCF suggest that it leads to improvement in employees' commitment (Fontinha et al., 2013), promoting innovation at work (Chang et al., 2003), extra-role behaviors (Ahmad et al., 2018; Mo & Shi, 2015), work engagement and turnover (Sharma et al., 2021), job satisfaction and organization commitment (Mazumdar et al., 2022), and reduce employees' turnover (Collins, 2010), etc. Hence, our finding in a new addition into the several possible outcomes of PCF.

Finally, we also found a positive mediating role of PCF between GTL and job performance. This finding is also in line with the previous studies conducted by Ahmad et al., (2018) who found support for the mediating role of PCF. Furthermore, this finding is also in line with the recent studies conducted by Sharma et al., (2021) who found the mediating role of PCF between performance management system's effectiveness with work engagement and turnover intention.

6. Theoretical Implications

Green Transformational Leadership is an emerging concept having relevance with development, corporate and any other sectors. Transformational leaders with green orientation have the leverage of motivating workers towards achieving environmental sustainability (Singh et al., 2020).

Several theoretical significances from this study can be noted. First, this would be among the few first empirical studies to explore the direct impact of green transformational leadership on non-green workplace outcomes such as job performance. So far, few studies have explored this important relationship to assert the business case for green transformational leadership. Therefore, this is a novel addition to the extant literature on leadership in general and on green transformational leadership in particular. Second, this study is offering a novel framework by exploring the mediating path between green transformational leadership and non-green job performance. This variable (PCF) as mediator has also been studied in the context of green transformational leadership.

Third, this study is being conducted in a developing country i.e., Pakistan. Past studies on green transformational leadership are mostly focused on the developed world. Therefore, there is less evidence available of the generalizability of its findings. Likewise, the mediating role of psychological contract fulfillment is also a new addition therefore, overall, it is a new framework. Further, it can showcase new directions for future research. This study will serve as a basis for several other relevant research in the future focusing on GTL and non-green outcomes. Our study suggests that the green transformational leadership has far-reaching implications beyond merely the green and environmentally viable outcomes. It rather influences the workers in many ways including in non-green job performance (Begum et al., 2022).

The study further suggests that the GTL has a pivotal role in the sustainable development (Zhuravleva et al., 2022). The western world has more orientation to the Green Transformational Leadership and Green Growth as compared to the developing countries. Another theoretical contribution of this study is that it combines the concepts of PCF and GTL and proposes a research framework of non-green job performance outcomes. The research proves the positive impact of direct relationship of GTL on non-green job performance as well as through the mediating role of PCF.

7. Practical Implications

Several practical significances for organizations can also be noted from this study. In the present era, organizations have legislative pressures for promoting environmentally friendly behaviors with employees, only it happens when the leaders or decisions making

bodies have the pro-environmental attitude. For this purpose, organizations can organize different programs or training for their employees which will also make them more effective and efficient performers. Moreover, based on this attribute organizations can take it as a strong business case to take it as a competitive advantage for their organization.

Pro-environmental behaviors of leaders can change organizational performance by arranging training for their employees. Managers must understand that their staff watch them closely and are either inspired or skeptical based on their attitudes and behavior. It is of paramount significance that the leaders in organizations not only demonstrate green qualities themselves, but they are equally inspirational for their followers to do so. In the workspace, supportive leaders applaud and also encourage workers' learning, progress, and expansion (Ibrahim et al., 2019). The results this study will bring in more clarity in the vision to manage the organizational affairs particularly while dealing with the workers. It will be useful not only for running of day-to-day affairs but also for chalking out policies and procedures of the firm in terms of improving their performance as well as environmental footprint through promotion of GTL (Tsymbaliuk et al., 2021).

Green practices stemming from the GTL in organizations can achieve better job performance. The likelihood for individuals to feel proud on associating themselves with organizations that foster green practices. Consequently, organizations can get benefits from GTL stimulated by psychological contract fulfilment under social exchange theory. The study and its findings can be highly beneficial for the organizations to thrive from within and also radiating a brilliant message of adopting environment-friendly measures led by GTL. In other words, implementing GTL potentially help people working under visionary leaders improve their non-green job performance.

Furthermore, employee-employer trust and employee engagement have both changed as a result of the COVID-19. PCF can now be used more effectively to improve employee-employer communication, collaboration, and communication behaviors. As a result, PCF is more important than ever before.

8. Limitations and Future Research

Our research has some limitations. One significant drawback is that the data were cross-sectional, which hampered our ability to draw causal conclusions from our findings. Future research should focus on the impact of green transformational leadership on job performance, as well as psychological contract fulfillment as a mediator drawing data longitudinally.

Second notable limitation of this study is that it took into account only one cultural environment (i.e. Pakistan). Accounting for cultural differences is an essential step toward ensuring that our findings are able to be generalized. Third, we failed to figure out the differences in impact between traditional GTL, as well as non-green transformational leadership, which might have provided more insight. Fourth, no moderator was used in our research as there could be potential moderators, such as perceived organizational support, that can promote or impede the correlations between the research variables. Fifth, the same model could be used for the industry just like for private and public sector organizations. Sixth, individuals were the unit of analysis in this study; however, we suggest that future studies should be built based on organizations or sectors.

Seventh, an important dimension in future can be to separately analyze the role of women leadership about GTL and its impact both on green and nongreen work performance and in tailoring the behaviors of employees. Finally, in explaining our findings, this study ignores the influence of boundary conditions.

Research Funding

Researchers received no research grant or funds for this research study.

REFERENCES

Ahmad, I., & Zafar, M. A. (2018). Impact of psychological contract fulfillment on organizational citizenship behavior: Mediating role of perceived organizational support. *International Journal of Contemporary Hospitality Management*, *30*(2), 1001-1015.

Ahmad, I., Donia, M. B., Khan, A., & Waris, M. (2018). Do as I say and do as I do? The mediating role of psychological contract fulfillment in the relationship between ethical leadership and employee extra-role performance. *Personnel Review*, *48*(1), 98-117.

Ahmad, I., Ullah, K., & Khan, A. (2021). The impact of green HRM on green creativity: mediating role of pro-environmental behaviors and moderating role of ethical leadership style. *The International Journal of Human Resource Management*, [Published online].

Begum, S., Ashfaq, M., Xia, E., & Awan, U. (2022). Does green transformational leadership lead to green innovation? The role of green thinking and creative process engagement. *Business Strategy and the Environment*, *31*(1), 580-597.

Blau, P. (1964), Exchange and Power in Social Life, Wiley Publishers, New York, NY.

Casser, V., Bezzina, F., & Buttigieg, S. C. (2017). The relationship between transformational leadership and work attitudes: Comparing mediating influences of social identity and the psychological contract. *Leadership & Organization Development Journal*, *38*(5), 646-661.

Chang, H.-T., Hsu, H.-M., Liou, J.-W. and Tsai, C.-T. (2013). Psychological contracts and innovative behavior: a moderated path analysis of work engagement and job resources. *Journal of Applied Social Psychology*, *Collins*, *43*(10), 2120-2135.

Chen, Y. S., & Chang, C. H. (2013). The determinants of green product development performance: Green dynamic capabilities, green transformational leadership, and green creativity. *Journal of Business Ethics*, *116*(1), 107-119.

Cohen, J. (1988). Statistical power analysis for the behavioral sciences (2nd ed.). Hillsdale, NJ: Lawrence Erlbaum Associates.

Collins, M.D. (2010). The effect of psychological contract fulfillment on manager turnover intentions and its role as a mediator in a causal, limited-service restaurant environment. *International Journal of Hospitality Management*, *29*(4), 736-742.

Colquitt, J.A., Baer, M.D., Long, D.M. & Halvorsen-Ganepola, M.D.K. (2014). Scale indicators of social exchange relationships: a comparison of relative content validity. *Journal of Applied Psychology*, *99*(4), 599-618

Conway, N. & Coyle-Shapiro, J.A.-M. (2012). The reciprocal relationship between psychological contract fulfillment and employee performance and the moderating role of perceived organizational support and tenure. *Journal of Occupational and Organizational Psychology*, *85*, 277-299.

Conway, N. and Briner, R.B. (2005), *Understanding Psychological Contracts at Work*, Oxford University Press, Oxford.

Cropanzano, R. and Mitchell, M.S. (2005). Social exchange theory: an interdisciplinary review. *Journal of Management*, *31*(6), 874-900.

Du, Y., & Yan, M. (2022). Green Transformational Leadership and Employees' Taking Charge Behavior: The Mediating Role of Personal Initiative and the Moderating Role of Green Organizational Identity. *International Journal of Environmental Research and Public Health*, *19*(7), 4172.

Farrukh, M., Ansari, N., Raza, A., Wu, Y., & Wang, H. (2022). Fostering employee's pro-environmental behavior through green transformational leadership, green human resource management and environmental knowledge. *Technological Forecasting and Social Change*, *179*, 121643.

Fontinha, R., Chambel, M.J. & Cuyper, N.D. (2013). Training and the commitment of outsourced information technologies' workers: psychological contract fulfillment as mediator. *Journal of Career Development*, *41*(4), 321-340.

Geisser, S. (1974). A predictive approach to the random effect model. *Biometrika*, *61*(1), 101-107.

Gold, A. H., Malhotra, A. & Segars. A. H., 2001. Knowledge Management: An Organizational Capabilities Perspective. *Journal of Management Information Systems*, *18*(1), 185–214.

Groves, R. M., & Peytcheva, E. (2008). The impact of nonresponse rates on nonresponse bias. Public Opinion Quarterly, *72*, 167−189.

Guzel, A. E., & Okumus, İ. (2020). Revisiting the pollution haven hypothesis in ASEAN-5 countries: new insights from panel data analysis. *Environmental Science and Pollution Research*, *27*(15), 18157-18167.

Hair Jr, J. F., Howard, M. C., & Nitzl, C. (2020). Assessing measurement model quality in PLS-SEM using confirmatory composite analysis. *Journal of Business Research*, *109*, 101-110.

Hair, Sarstedt, M., Ringle, C. M., & Gudergan, S. P. (2017). *Advanced issues in partial least squares structural equation modeling*: Sage publications.

Henseler, J., Ringle, C. M., & Sarstedt, M. (2015). A new criterion for assessing discriminant validity in variance-based structural equation modeling. *Journal of the Academy of Marketing Science*, *43*(1), 115-135.

Ibrahim, S. N. H., Suan, C. L., & Karatepe, O. M. (2019). The effects of supervisor support and self-efficacy on call center employees' work engagement and quitting intentions. *International Journal of Manpower*, *40*(4), 688-703.

Iqbal, Q., Ahmad, N. H., & Halim, H. A. (2020). How does sustainable leadership influence sustainable performance? Empirical evidence from selected ASEAN countries. *Sage Open*, 1-16.

Kehoe, R. R., & Wright, P. M. (2013). The impact of high-performance human resource practices on employees' attitudes and behaviors. *Journal of Management*, *39*, 366-391.

Khan, A. N., & Khan, N. A. (2022). The nexuses between transformational leadership and employee green organizational citizenship behaviour: Role of environmental attitude and green dedication. *Business Strategy and the Environment*, *31*(3), 921-933.

Kickul, J., & Lester, S. (2001). Broken Promises: Equity Sensitivity as a Moderator between Psychological Contract Breach and Employee Attitude and Behavior. *Journal of Business and Psychology*, 191-218.

Koohang, A., Paliszkeiwicz, J., & Goluchowski, J. (2017). The impact of leadership on trust, knowledge management, and organizational performance: A research model. *Industrial Management and Data Systems*, *117*(3), 521-537.

Liu, X. & Jie, X. (2020). Can Manager's Environmentally Specific Transformational Leadership Improve Environmental Performance? Springer Nature Switzerland AG, ICMSEM2019, AISC 1002, pp. 730–742.

Mazumdar, B., Warren, A., Dupré, K. and Brown, T. (2022). Employment expectations: examining the effect of psychological contract fulfillment on bridge employees' personal and work attitudes. *Personnel Review*, [Ahead of Print]

Mo, S. & Shi, J. (2015). Linking ethical leadership to employee's organizational citizenship behavior: testing the multilevel mediation role of organizational concern. *Journal of Business Ethics*, *141*(1), 151-162.

Podsakoff, P. M., MacKenzie, S. B., & Bommer, W. H. (1996). Transformational leader behaviors and substitutes for leadership as determinants of employee satisfaction, commitment, trust, and organizational citizenship behaviors. *Journal of Management*, *22*(2), 259–298.

Raja, U., Johns, G. & Ntalians, F. (2004). The impact of personality on psychological contracts. *Academy of Management Journal*, *47*(3), 350-367.

Robertson, J. L. (2018). The nature, measurement and nomological network of environmentally specific transformational leadership. *Journal of Business Ethics*, *151*(4), 961-975.

Rodwell, J., Ellershaw, J. and Flower, R. (2015). Fulfill psychological contract promises to manage in-demand employees. *Personnel Review*, *44*(5), 689-701.

Rousseau, D.M. (1995). *Psychological Contracts in Organizations: Understanding Written and Unwritten Agreements*, Sage, Newbury Park, CA.

Sharma, N. P., Sharma, T., & Agarwal, M. N. (2021). Relationship between perceived performance management system (PMS) effectiveness, work engagement and turnover intention: mediation by psychological contract fulfillment. *Benchmarking: An International Journal.* [Ahead of Print]

Singh, S. K., Del Giudice, M., Chierici, R., & Graziano, D. (2020). Green innovation and environmental performance: The role of green transformational leadership and green human resource management. *Technological Forecasting and Social Change*, 150, 119762.

Smith, H. L. (2009). Double sample to minimize bias due to non-response in a mail survey (PSC Working Paper Series, No. 09-05). Philadelphia: Population Studies Center, University of Pennsylvania.

Srour, C.K.G.E.K., Kheir-El-Din, A. & Samir, Y.M. (2020). The effect of green behavior in Egypt. *Academic Journal of Interdisciplinary Studies*, *9*(5), 1-15.

Stone, M. (1974). Cross-Validatory Choice and Assessment of Statistical Predictions. *Journal of the Royal Statistical Society, 36*(2), 111-147.

Tajfel, H. & Turner, J.-C. (1985). The social identity theory of intergroup behaviour. In S. Worchel & W. G. Austin (Eds.) *Psychology of Intergroup Relations:* 7-24. Chicago: Nelson Hall.

Tosun, C., Parvez, M. O., Bilim, Y., & Yu, L. (2022). Effects of green transformational leadership on green performance of employees via the mediating role of corporate social responsibility: Reflection from North Cyprus. *International Journal of Hospitality Management*, *103*, 103218.

Tsymbaliuk, S., Vasylyk, A., & Stoliaruk, K. (2021). Green human resource management: how to implement environmental issues into HR practices. In *E3S Web of Conferences* (Vol. 255, p. 01037). EDP Sciences.

Vittal, S.A. (2007). Linking KM effectiveness attributes to organizational performance. *The Journal of Information and Knowledge Management Systems, 37*(2), 133-149.

Vlachos, P. A., Panagopoulos, N. G., & Rapp, A. A. (2013). Feeling good by doing good: Employee CSR-induced attributions, job satisfaction, and the role of charismatic leadership. *Journal of Business Ethics*, *118*(3), 577-588.

Wieseke, J., Ahearne, M., Lam, S.K. and Dick, R.V. (2009). The role of leaders in internal marketing. *Journal of Marketing*, *73*(2), 123-145.

Zhang, A. Y., Tsui, A. S. & Wang, D. X. (2011). Leadership behaviours and group creativity in Chinese organizations: The role of group processes. *Leadership Quarterly, 22*(5), 851–862.

Zhao, N., Fan, D., & Chen, Y. (2021). Understanding the Impact of Transformational Leadership on Project Success: A Meta-Analysis Perspective. *Human Behavior Modelling in Engineering Management under Industry 4.0. Article ID:* 7517791.

Zhuravleva, N. A., & Poliak, M. (2022). Green Transformational Leadership and Green Growth. Chapters in, Mario Franco ed.), *Leadership – New Insights*, IntechOpen.